GRID LOCATION
4-5/D

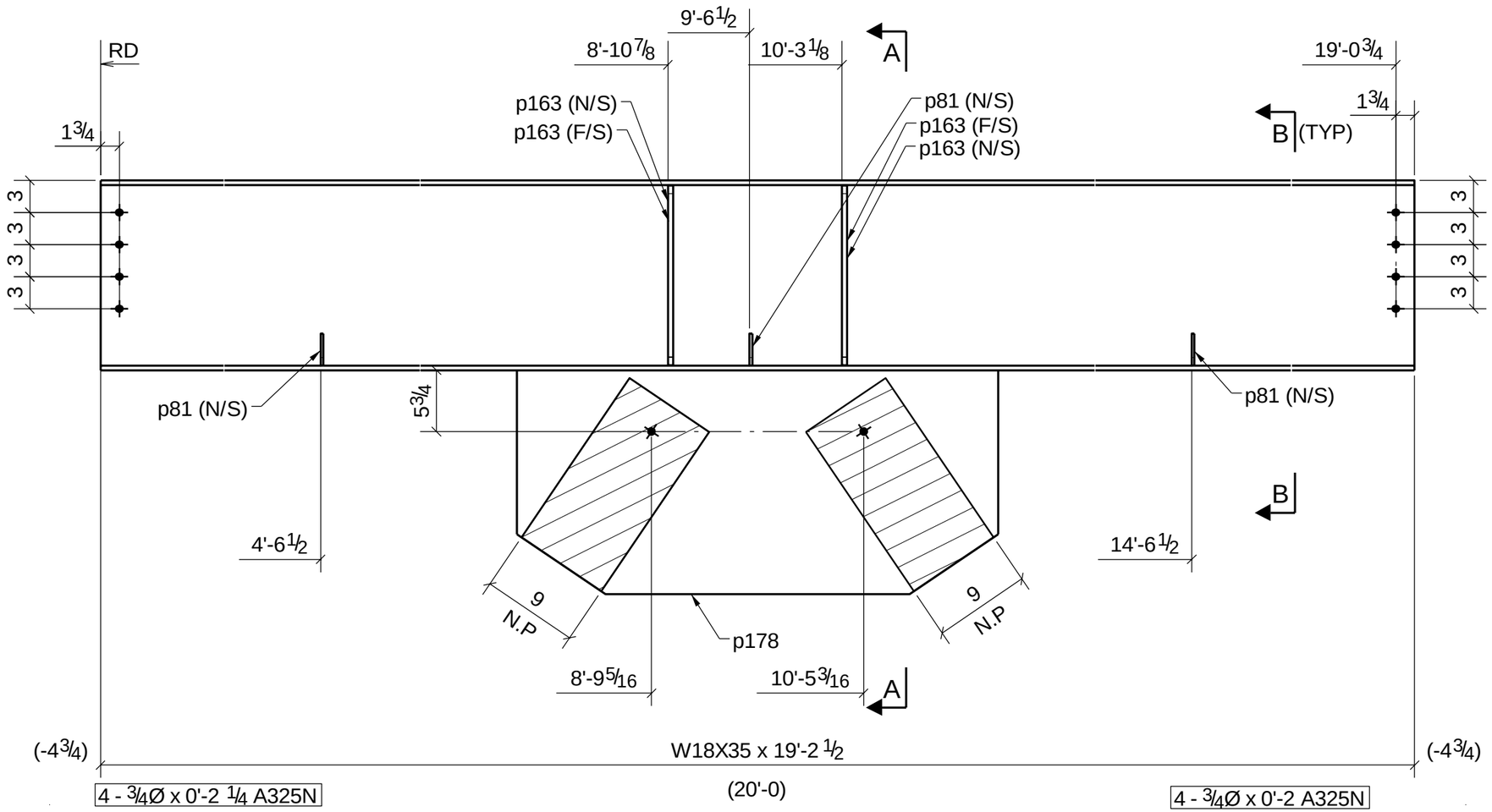

ONE ~ BEAM ~ B81

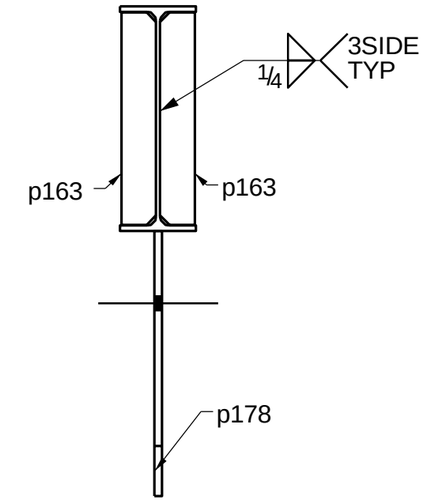

SECTION A - A

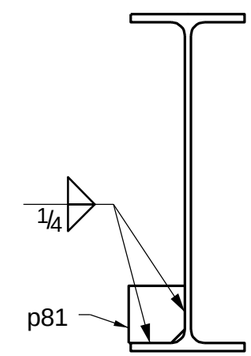

SECTION B - B

1.NO PAINT 3 AROUND HOLES
2.NO PAINT AT UNCAPED CHANNEL & HSS
3.NO PAINT AT END OF MOMENT PREP.
4.N.P INDICATES NO PAINT AREA
5.HATCH INDICATE NO PAINT AREA

BILL OF MATERIAL

SHIP MARK	PIECE MARK	QTY	DESCRIPTION	LENGTH	REMARKS
B81		1	BEAM		
	B81	1	W18X35	19'-2 1/2"	
	p81	3	PL1/4"X3"	0'-3"	
	p163	4	PL1/2"X2 3/4"	1'-4 3/4"	
	p178	1	PL5/8"X20 15/16"	3'-8 15/16"	
Tekla structures			FIELD BOLTS		
		4	3/4" Ø A325N BOLTS	0'-2 1/4"	w/HN&FW
		4	3/4" Ø A325N BOLTS	0'-2"	w/HN&FW

BILL OF MATERIAL

SHIP MARK	PIECE MARK	QTY	DESCRIPTION	LENGTH	REMARKS

SHOP NOTES

REF. DRAWINGS:	E2	All Pipe:	A53 GR-B U.N.O.
All Material:	A36 U.N.O.	All Rebar:	A706 U.N.O.
All W-Flange:	A992 U.N.O.	All Headed Studs:	A108 U.N.O.
All TS:	A500 GR-B U.N.O.	Welds:	E70XX U.N.O.

BLUE PRINTS			BLUE PRINTS			BLUE PRINTS		
NO.	DATE	FOR	NO.	DATE	FOR	NO.	DATE	FOR

APPROVAL/REVIEW AUTHORITY:

PLEASE REVIEW THIS DRAWING CAREFULLY IT REPRESENT OUR INTERPRETATION OF THE INTENT OF THE CONTRACT DOCUMENTS, HOWEVER, THE STEEL FABRICATOR AND THE STRUCTURAL DETAILER ASSUMES NO RESPONSIBILITY FOR THE ACCURACY OF THE INFORMATION SHOWN ON THIS DRAWING. THIS IS THE RESPONSIBILITY OF THE BUYER.

UNLESS NOTED TO THE CONTRARY ON THIS DRAWING WHEN IT IS RETURNED FROM APPROVAL, IT WILL BE ASSUMED THAT ALL INFORMATION SHOWN HEREIN HAS THE AFFIRMATION OF APPROVAL AUTHORITY.

SUBSEQUENT CHANGED INFORMATION SHOWN ON THESE DRAWINGS AFTER FIRST SUBMISSION WILL BE CONSIDERED AS CONTRACT CHANGES.

ADOPTED BY THE AMERICAN INSTITUTE OF STEEL CONSTRUCTION.

FOR FABRICATION

NO.	DESCRIPTION	DATE
1	For Fabrication	

ITEM	BEAM	DRAWN BY:	JKV
JOB	NORMS RESTAURANTS, LLC	DATE	
LOCATION	17904 LAKEWOOD BLVD BELLFLOWER	CHECKD BY:	JKS
ARCH.	GEOFFREY B.LIM	DATE	06/16/17
CONTR.	----	APPROVED	
ENGR.	McVEIGH & MANGUM		

JOB NO.	HOLE SIZE U.N.	FINISH	DRWG. NO.
--	13/16	1 S/C PRIM	B81 / 1