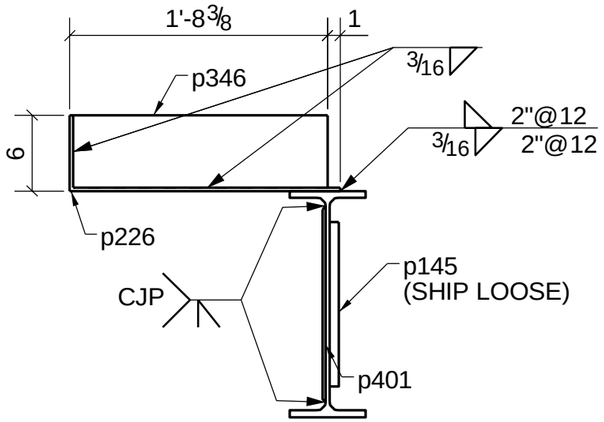

SECTION- A - A

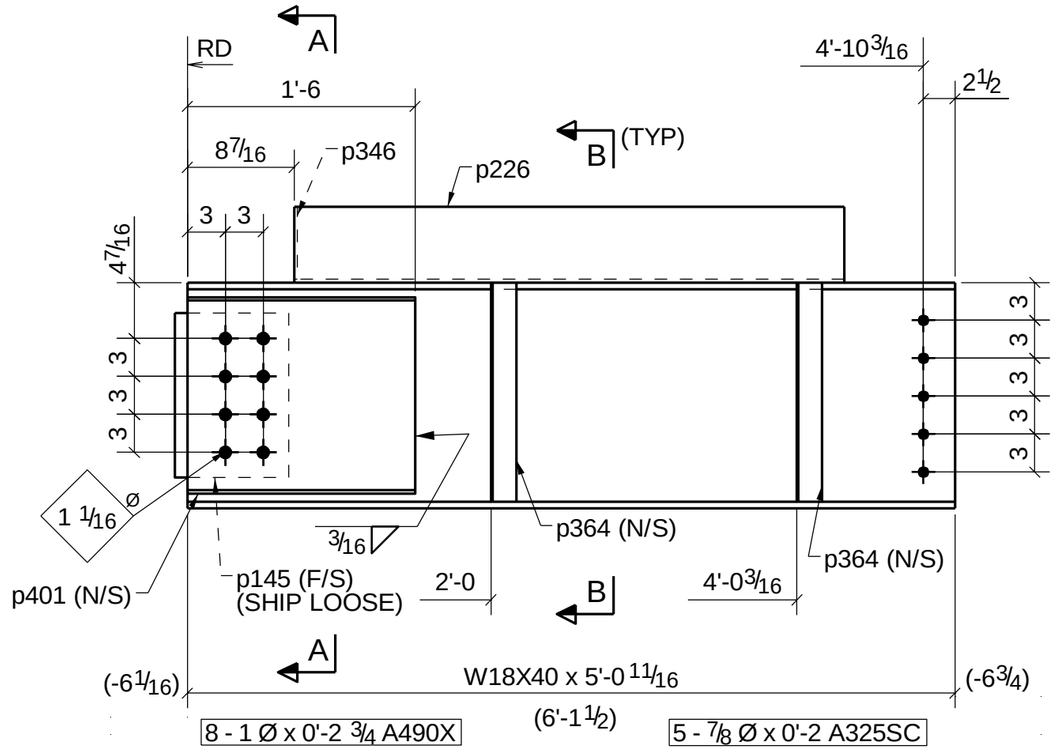

FIELD VERIFY BEAM LENGTH PRIOR TO FABRICATION

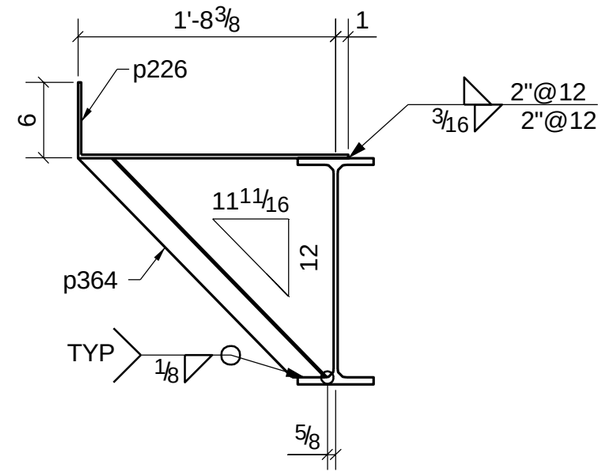

SECTION- B - B

NOTES:-

1). NO PAINT 3" AROUND HOLES.

2). HATCH INDICATES NO PAINT AREA.

3). N.P DENOTES NO PAINT.

4). NO PAINT AT TOP SURFACE OF BEAM.

ONE ~ BEAM ~ B3

BILL OF MATERIAL

SHIP MARK	PIECE MARK	QTY	DESCRIPTION	LENGTH	REMARKS
B3		1	BEAM		
	B3	1	W18X40	5'-0 11/16"	
	p145	1	FL3/4"X9"	1'-1"	(A572-GR.50)
	p226	1	BPL1/4"X26 7/8"	3'-7 1/2"	(BENT)
	p346	1	FL1/4"X5 3/4"	1'-8 1/8"	
	p364	2	L2X2X1/8	2'-2 3/16"	
	p401	1	PL1/4"X15 1/2"	1'-6"	(A572-GR.50)
			FIELD BOLTS		
		5	7/8" Ø A325SC BOLTS	0'-2"	w/HN&FW
		8	1" Ø A490X BOLTS	0'-2 3/4"	w/HN&FW

Tekla structures

BILL OF MATERIAL

SHIP MARK	PIECE MARK	QTY	DESCRIPTION	LENGTH	REMARKS

SHOP NOTES

REF. DRAWINGS:	E2	All Pipe:	A53 U.N.O.
All Material:	A36 U.N.O.	All Rebar:	A706 U.N.O.
All W-Flange:	A992 U.N.O.	All Headed Studs:	A108 U.N.O.
All TS:	A500 GR-B U.N.O.	Welds:	E70XX U.N.O.

BLUE PRINTS			BLUE PRINTS			BLUE PRINTS		
NO.	DATE	FOR	NO.	DATE	FOR	NO.	DATE	FOR

APPROVAL/REVIEW AUTHORITY:

PLEASE REVIEW THIS DRAWING CAREFULLY IT REPRESENT OUR INTERPRETATION OF THE INTENT OF THE CONTRACT DOCUMENTS, HOWEVER, THE STEEL FABRICATOR AND THE STRUCTURAL DETAILER ASSUMES NO RESPONSIBILITY FOR THE ACCURACY OF THE INFORMATION SHOWN ON THIS DRAWING. THIS IS THE RESPONSIBILITY OF THE BUYER.

UNLESS NOTED TO THE CONTRARY ON THIS DRAWING WHEN IT IS RETURNED FROM APPROVAL, IT WILL BE ASSUMED THAT ALL INFORMATION SHOWN HEREIN HAS THE AFFIRMATION OF APPROVAL AUTHORITY.

SUBSEQUENT CHANGED INFORMATION SHOWN ON THESE DRAWINGS AFTER FIRST SUBMISSION WILL BE CONSIDERED AS CONTRACT CHANGES.

ADOPTED BY THE AMERICAN INSTITUTE OF STEEL CONSTRUCTION.

FOR FABRICATION

NO.	DESCRIPTION	DATE
1	For Fabrication	

ITEM	BEAM	DRAWN BY:	BSS
JOB	H&M	DATE	
LOCATION	US183 VICTORIA GARDEN	CHECKD BY:	SLF
ARCH.	LDA DESIGN GROUP INC.	DATE	07/04/17
CONTR.	--	APPROVED	
ENGR.	HSA & ASSOCIATES INC,		

JOB NO.	HOLE SIZE U.N.	FINISH	DRWG. NO.
--	15/16	STD SHOP	B3 / 1