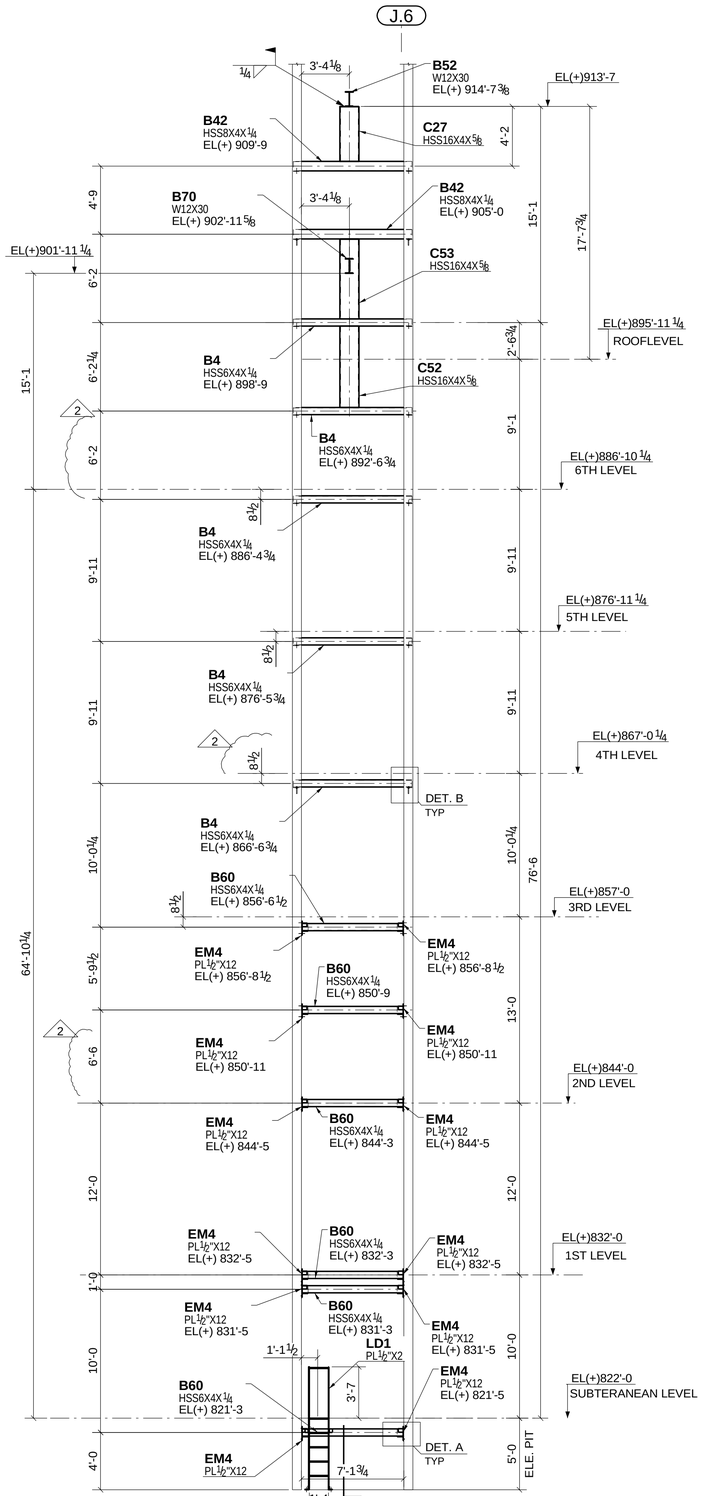

SECTION -1
(REF:- E23)

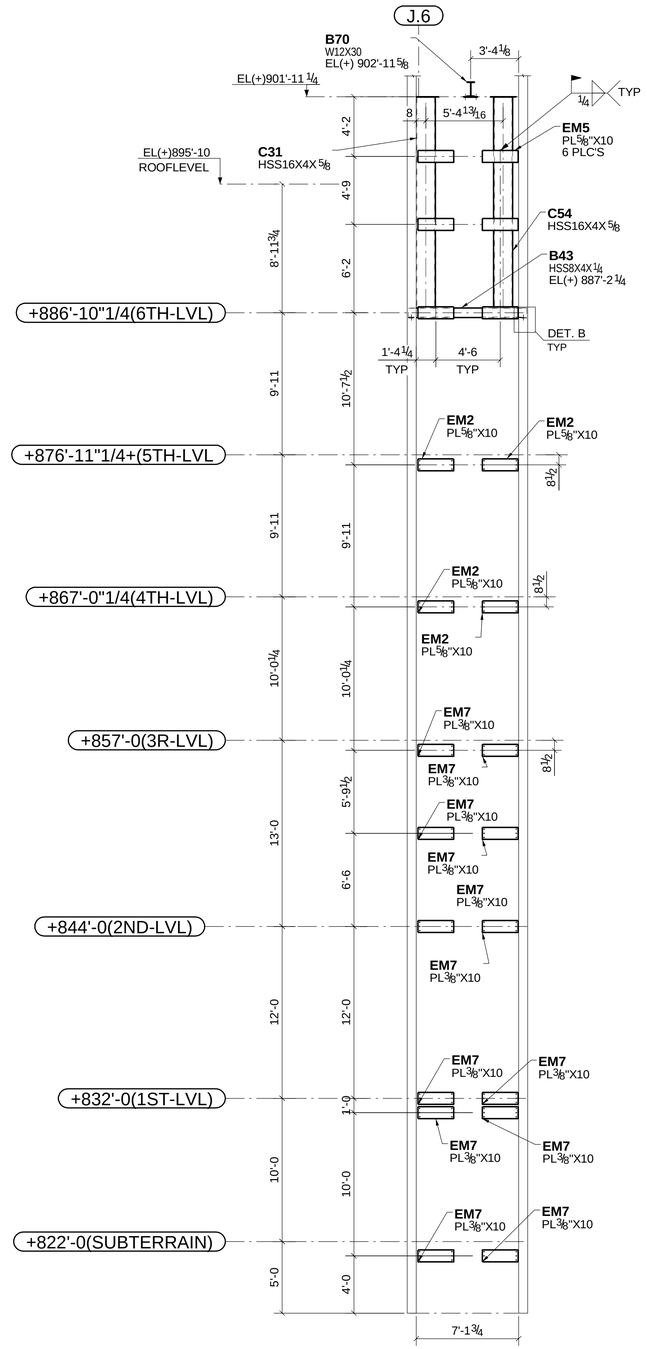

SECTION 2 - 2
E23

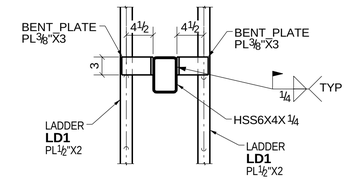

SECTION 2 - 2

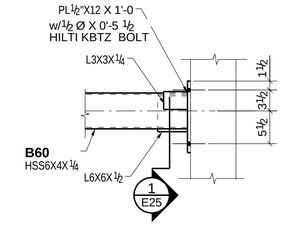

DETAIL - A
(REFER:-2/SD1.04)

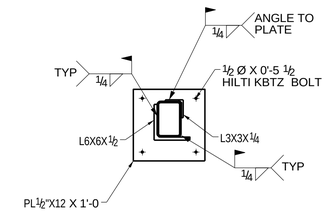

SECTION 1 - 1
(REFER:-2/SD1.04)

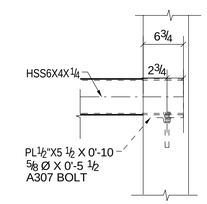

DETAIL - B
(REFER:-13/SD3.03

DATE	NO.	REVISION/DESCRIPTION
01/03/18	2	REVISED AS NOTED
01/02/18	1	For Field Use
09/11/17	C	For Re-Approval

NOTES

PROJ NO:- J160037
ELECTRODE :- E70XX
PROJECT :-
WARNER PLACE APARTMENTS
FAIRFIELD RESIDENTIAL LLC
DETAILS OF :-
ELEVATOR 1 & 2
STEEL LAYOUT PLAN(SEGMENT 1)

DETAILER	CHECKER	FOR APPROVAL	FOR CONST.	SHEET #
SHK	SHL	DATE: 12/12/16	DATE: 01/02/18	E25 2

FOR FIELD USE

Tekla structures